S90.09 Q&As

SOA Design & Architecture Lab

Pass SOA S90.09 Exam with 100% Guarantee

Free Download Real Questions & Answers **PDF** and **VCE** file from:

https://www.passapply.com/s90-09.html

100% Passing Guarantee
100% Money Back Assurance

Following Questions and Answers are all new published by SOA Official Exam Center

Instant Download After Purchase
100% Money Back Guarantee
365 Days Free Update
800,000+ Satisfied Customers

QUESTION 1

Service Consumer A sends a message with a business document to Service A (1), which writes the business document to Database A (2). Service A then forwards the business document to Service B (3), which writes the business document to Database B (4).

Service B then responds to Service A with a message containing a failure or success code (5) after which Service A responds to Service Consumer A with a message containing a failure or success code (6). Upon receiving the message, Service Consumer A updates a log table in Database B (7). The log entry is comprised of the entire business document.

Database A is dedicated to the Service A service architecture and Database B is a shared database.

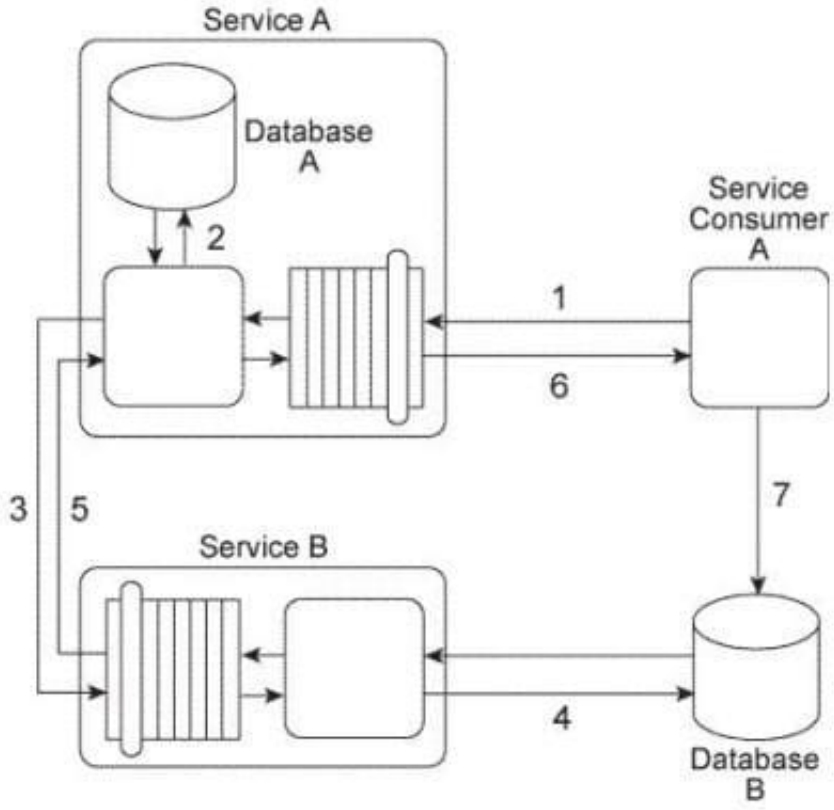

There are two problems with this service composition architecture that you are asked to address: First, both Service Consumer A and Service B need to transform the business document data from an XML format to a proprietary Comma Separated Value (CSV) in order to write the data to Database B. This has led to redundant data format transformation logic that has been difficult to keep in synch when Database B changes. Secondly, Service A is an entity service that is being reused by several other service compositions. It has lately developed reliability problems that have caused the service to become unavailable for extended periods. What steps can be taken to solve these problems?

A. The Legacy Wrapper pattern can be applied so that data access to Database B is separated into a new wrapper utility service. This way, the Data Format Transformation pattern only needs to be applied within the logic of this new service which will expose a standardized contract that both Service Consumer A and Service B can access. The Asynchronous Queuing pattern can be applied so that messaging queues are established between Service Consumer A and Service A and between Service A and Service B . The Service Autonomy principle can be further applied to Service A in order to establish a more isolated and reliable surrounding infrastructure.

B. The Legacy Wrapper pattern can be applied so that data access to Database B is separated into a new wrapper utility service. This way, the Data Format Transformation pattern only needs to be applied within the logic of this new service which will expose a standardized contract that both Service Consumer A and Service B can access. The Reliable Messaging pattern can be applied so that acknowledgements are passed between Service Consumer A and Service A and between Service A and Service B . The Service Composability principle can be further applied to Service A in order to optimize its service architecture for improved participation in multiple service compositions.

C. The service composition can be redesigned with the application of the Contract Centralization pattern so that instead of writing the business document to Database B, Service Consumer A sends the business document to Service B instead. This way, Service B would provide the only location where data format transformation logic for Database B needs to be carried out, which further supports the application of the Service Reusability principle. The Reliable Messaging pattern can be applied so that acknowledgements are passed between Service Consumer A and Service A and between Service A and Service B . The Service Composability principle can be further applied to Service A in order to optimize its service architecture for improved participation in multiple service compositions.

D. None of the above.

Correct Answer: A

QUESTION 2

When Service A receives a message from Service Consumer A(1),the message is processed by Component A. This component first invokes Component B (2), which uses values from the message to query Database A in order to retrieve additional data. Component B then returns the additional data to Component A.

Component A then invokes Component C (3), which interacts with the API of a legacy system to retrieve a new data value. Component C then returns the data value back to Component A.

Next, Component A sends some of the data it has accumulated to Component D (4), which writes the data to a text file that is placed in a specific folder. Component D then waits until this file is imported into a different system via a regularly scheduled batch import. Upon completion of the import, Component D returns a success or failure code back to Component A.

Component A finally sends a response to Service Consumer A (5) containing all of the data collected so far and Service Consumer A writes all of the data to Database B (6).

Components A, B, C. and D belong to the Service A service architecture. Database A, the legacy system, and the file folders are shared resources within the IT enterprise.

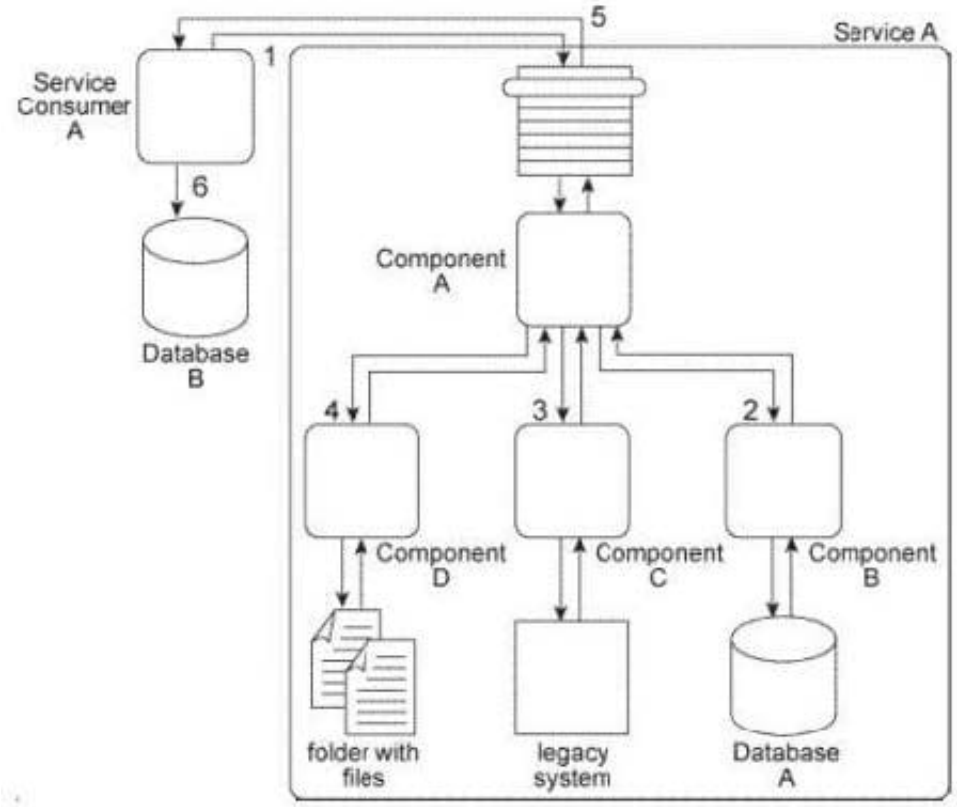

Service A is a task service that completes an entire business task on its own without having to compose other services. However, you have received many complaints about the reliability of Service A . Specifically, it has three problems. First, when Component B accesses Database A, it may not receive a response for several minutes when the database is being accessed by other applications in the IT enterprise. Secondly, the legacy system accessed by Component C frequently crashes and therefore becomes unavailable for extended periods of time. Third, for Component D to respond to Component A, it must first wait for the batch import of the files to occur. This can take several minutes during which Service Consumer A remains stateful and consumes excessive memory. What steps can be taken to address these three problems?

A. The Legacy Wrapper pattern can be applied so that Component B is separated to wrap the shared database, thereby allowing Component A to interact with this new service instead of directly interacting with the database. The Legacy Wrapper pattern can be applied again so that Component C is separated into a separate service that acts as a wrapper of the legacy system API. Component D can then be separated into a separate service and the Event-Driven Messaging pattern can be applied to establish a publisher- subscriber relationship between this new service and Component A and between Service A and Service Consumer A. The interaction between Service Consumer A and Component A is then redesigned so that Component A issues a message back to Service Consumer A when the event related to the batch import is triggered.

B. The Service Data Replication pattern can be applied so that Component B can access a replicated database instead of having to access the shared Database A directly. The Legacy Wrapper pattern can be applied so that Component C is separated into a separate service that acts as a wrapper of the legacy system API. Next, the Reliable Messaging pattern can be applied so that acknowledgements are issued from the new wrapper service to Component A, thereby enabling notifying Component A during times when the legacy system is unavailable. Finally, Component D is separated into a separate service and the Event-Driven Messaging pattern is applied to establish a publisher-subscriber relationship between this new service and Component A. The interaction between Service Consumer A and Component A is then redesigned so that Component A first interacts with Component B and the new wrapper service. Service A then issues a final message back to Service Consumer A.

C. The Service Data Replication pattern can be applied so that Component B can access a replicated database instead

of having to access the shared Database A directly. The Legacy Wrapper pattern can be applied so that Component C is separated into a separate service that acts as a wrapper of the legacy system API. Next, the Asynchronous Queuing pattern can be applied so that a messaging queue is positioned between Component A and the new wrapper service, thereby enabling communication during times when the legacy system is unavailable. Finally, Component D is separated into a new service and the Event-Driven Messaging pattern is applied to establish a publisher-subscriber relationship between this service and Component A and between Service A and Service Consumer A. The interaction logic is redesigned as follows: Component A interacts with Component B, the new wrapper service, and then issues a request to the new event-driven service. Upon receiving a response triggered by the event related to the batch import, Service A responds to Service Consumer A.

D. None of the above.

Correct Answer: C

QUESTION 3

Service A is a task service that sends Service B a message (2) requesting that Service B return data back to Service A in a response message (3). Depending on the response received. Service A may be required to send a message to Service C (4) for which it requires no response. Before it contacts Service B, Service A must first retrieve a list of code values from its own database (1) and then place this data into its own memory. If it turns out that it must send a message to Service C, then Service A must combine the data it receives from Service B with the data from the code value list in order to create the message it sends to Service C. If Service A is not required to invoke Service C, it can complete its task by discarding the code values.

Service A and Service C reside in Service Inventory A. Service B resides in Service Inventory B.

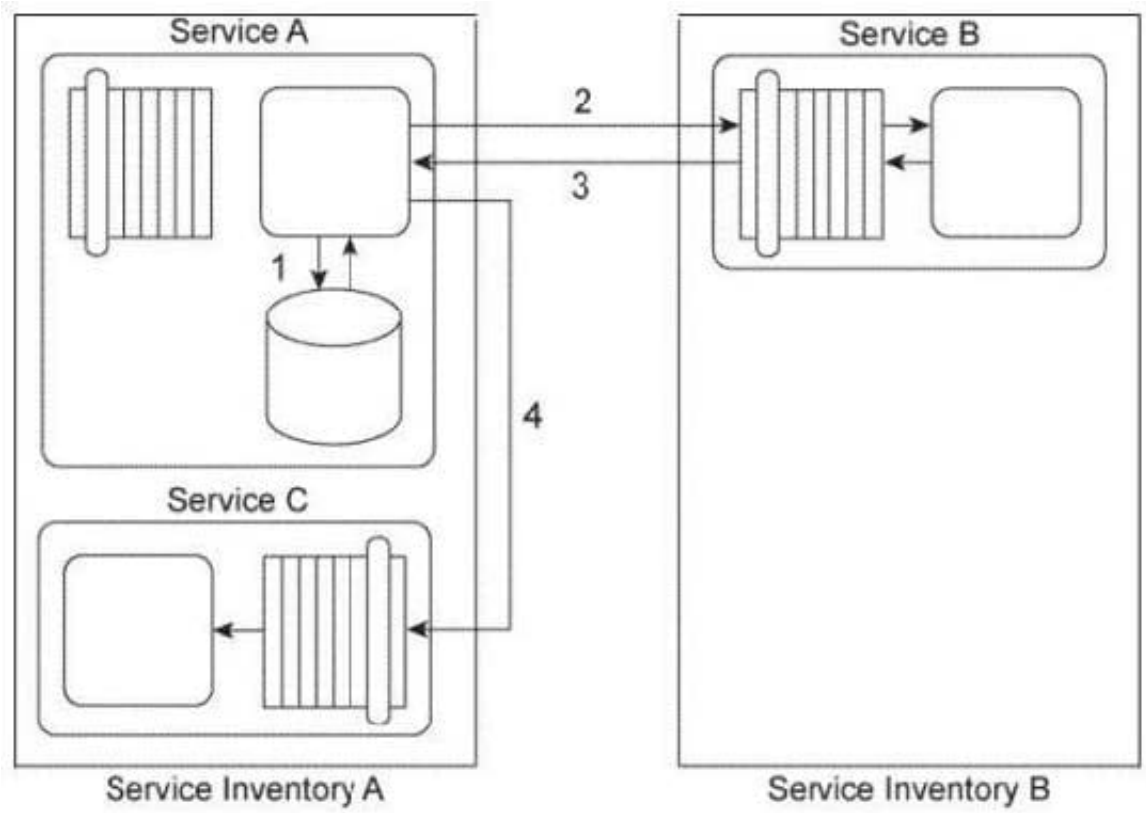

You are told that the services in Service Inventory A are all SOAP-based Web services designed to exchange SOAP 1.1 messages and the services in Service Inventory B are SOAP-based Web services designed to exchange SOAP 1.2

messages. Therefore, Service A and Service B cannot currently communicate. Furthermore, you are told that Service B needs to access a shared database in order to retrieve the data required by Service A. The response time of the database can sometimes be lengthy, which would cause Service A to consume too much resources while it is waiting and keeping the code values in memory. How can this service composition architecture be changed to avoid these problems?

A. The Protocol Bridging pattern can be applied by establishing an intermediate processing layer between Service A and Service B that can convert SOAP 1.1 messages to SOAP 1.2 messages and vice versa. The Service Data Replication pattern can be applied to Service B so that it is given a dedicated database with its own copy of the data it needs to access. The Service Normalization pattern can then be applied to ensure that the data within the replicated database is normalized with the shared database it is receiving replicated data from.

B. The Protocol Bridging pattern can be applied by establishing an intermediate processing layer between Service A and Service B that can convert SOAP 1.1 messages to SOAP 1.2 messages and vice versa. The Service Statelessness principle can be applied with the help of the State Repository pattern so that Service A can write the code value data to a state database while it is waiting for Service B to respond.

C. The Protocol Bridging pattern can be applied by establishing an intermediate processing layer between Service A and Service B that can convert SOAP 1.1 messages to SOAP 1.2 messages and vice versa. The Intermediate Routing pattern can be applied to dynamically determine whether Service A should send a message to Service C. The Service Autonomy principle can be applied to Service A to further increase its behavioral predictability by reducing the amount of memory it is required to consume.

D. None of the above.

Correct Answer: B

QUESTION 4

Service A has become increasingly difficult to maintain. Its core service logic has become bloated and convoluted because it has been updated numerous times during which additional functionality was added to interact with the database and the legacy system and to support interaction with Service Consumers A and B (via the two service contracts) as well as interaction directly with Service Consumer C.

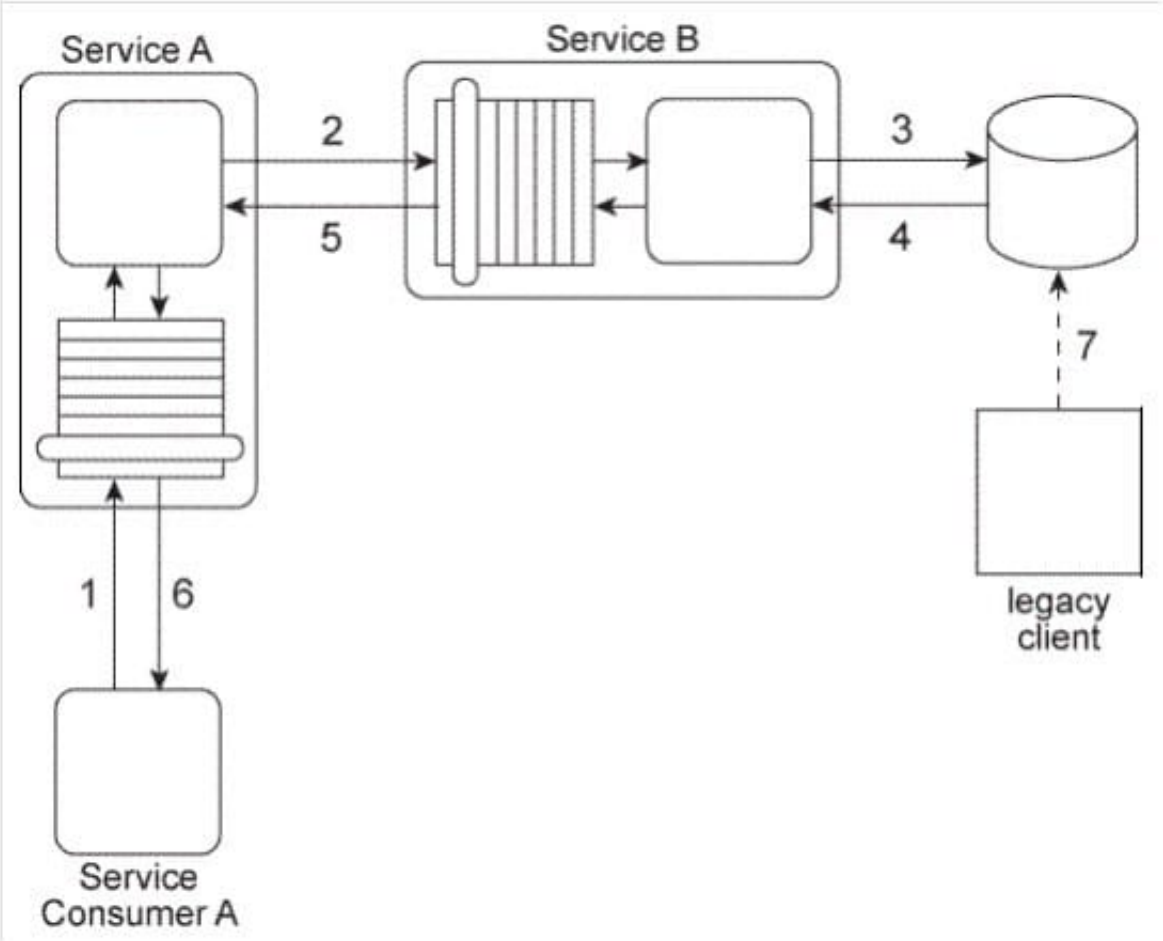

What steps can be taken to solve these problems and to prevent them from happening again in the future?

A. The Service Facade pattern can be applied to position a Facade component between the core service logic and the implementation resources (the database and the legacy system) and to also position a Facade component between the two service contracts and Service Consumers A and

B. The Official Endpoint pattern can be applied to limit access to Service A to one of its two published service contracts. The Service Loose Coupling principle can be applied so that Service Consumer C does not negatively couple itself directly to the core service logic of Service A . B. The Service Facade pattern can be applied to position a Facade component between the core service logic and the implementation resources (the database and the legacy system) and to position a faade component between the core service logic and the two service contracts. The Contract Centralization pattern can be applied to limit access to Service A to one of its two published service contracts. The Service Abstraction principle can be applied to hide the implementation details of Service A from service consumers.

C. The Service Faade pattern can be applied to position a Facade component between the core service logic and the two service contracts. The Contract Centralization pattern can be applied to limit access to Service A to one of its two published service contracts. The Service Loose Coupling principle can be applied so that Service Consumer C does not negatively couple itself directly to the core service logic of Service A .

D. None of the above.

Correct Answer: B

QUESTION 5

Our service inventory contains the following three services that provide invoice-related data access capabilities: Invoice, InvProc, and ProcInv. These services were created at different times by different project teams and were not required to comply to any design standards. Therefore each of these services has a different data model for representing invoice data.

Currently each of these three services has one service consumer: Service Consumer A accesses the Invoice service(1). Service Consumer B (2) accesses the InvProc service, and Service Consumer C (3) accesses the ProcInv service. Each service consumer invokes a data access capability of an invoice-related service, requiring that service to interact with the shared accounting database that is used by all invoice-related services (4, 5, 6).

Additionally, Service Consumer D was designed to access invoice data from the shared accounting database directly (7). (Within the context of this architecture. Service Consumer D is labeled as a service consumer because it is accessing a resource that is related to the illustrated service architectures.)

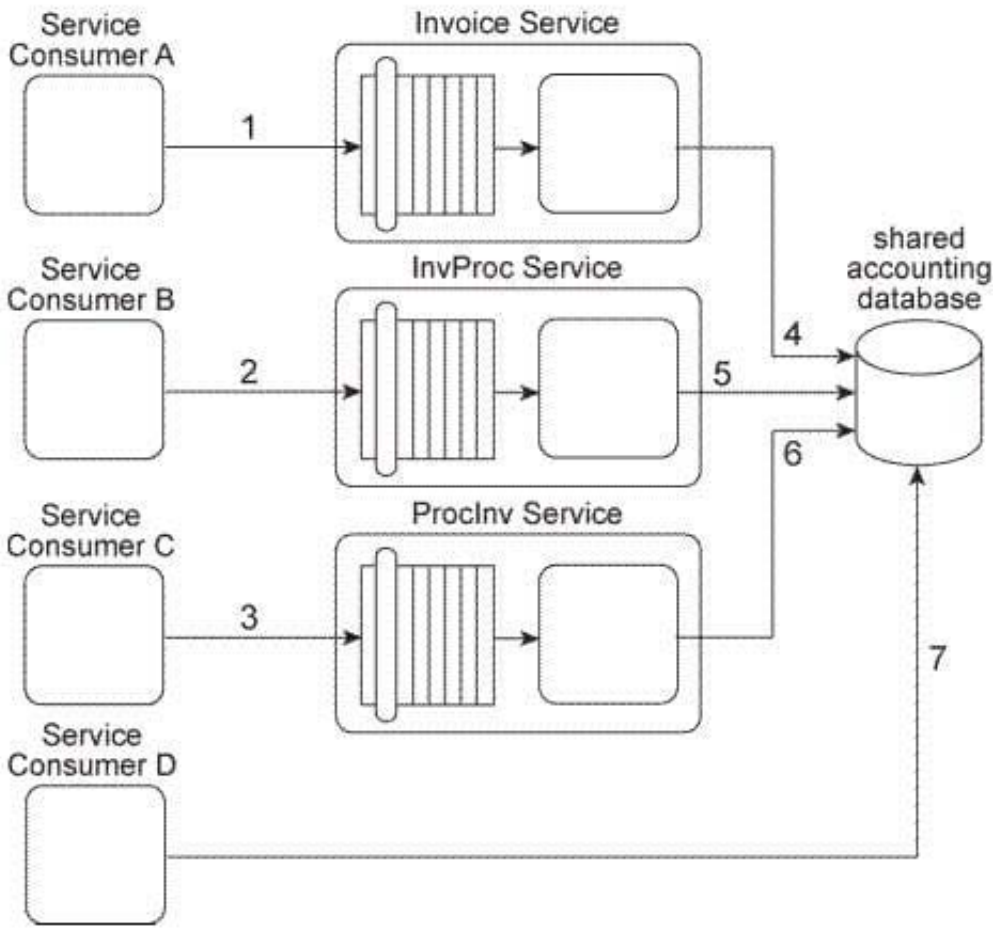

A project team recently proclaimed that it has successfully applied the Contract Centralization pattern to the service inventory in which the Invoice service, InvProc service, and ProcInv service reside. Upon reviewing the previously described architecture you have doubts that this is true. After voicing your doubts to a manager, you are asked to provide specific evidence as to why the Contract Centralization is not currently fully applied. Which of the following statements provides this evidence?

A. The Contract Centralization pattern is not fully applied to the Invoice, InvProc, and ProcInv services because they are being accessed by different service consumers and because they have redundant logic that introduces denormalization into the service inventory.

B. The Contract Centralization pattern is not fully applied because Service Consumer D is accessing the shared accounting database directly.

C. The Contract Centralization pattern is not fully applied because none of the invoice- related services are carrying out data access logic via a centralized and standardized invoice service. This is primarily because the Standardized Service Contract principle was not consistently applied during the delivery processes of the individual services.

D. None of the above.

Correct Answer: B

S90.09 VCE Dumps S90.09 Practice Test S90.09 Braindumps