HPE6-A29 Q&As

Aruba Certified Mobility Professional 6.4

Pass HP HPE6-A29 Exam with 100% Guarantee

Free Download Real Questions & Answers **PDF** and **VCE** file from:

https://www.passapply.com/hpe6-a29.html

100% Passing Guarantee
100% Money Back Assurance

Following Questions and Answers are all new published by HP Official Exam Center

- **Instant Download** After Purchase
- **100% Money Back** Guarantee
- **365 Days** Free Update
- **800,000+** Satisfied Customers

QUESTION 1

Which profiles are required in an AP Group to enable an SSID with VLAN 1, WPA2 and LMSIP? (Choose three)

A. Virtual-AP profile

B. WLAN profile

C. 802.1x authentication profile

D. AP System Profile

E. SSID Profile

Correct Answer: ADE

QUESTION 2

A 3200 controller has 32 PEF-NG license, 16 RFProtect license and 32 AP licenses, how many AP\\'s can terminate on the controller?

A. 32 Campus APs

B. 32 Campus and 32 Remote APs

C. 16 Campus APs

D. 16 Remote APs

Correct Answer: C

QUESTION 3

Referring to the diagram provided for this question, an employee brought an unauthorized AP from home and attached the LAN port to the cubicle Ethernet port. All Aruba APs and AMs as well as the employee AP are in VLAN 170 and within RF range of each other.

No traffic from the wired or wireless network has passed through the AP yet, but the AP began wireless broadcasts.

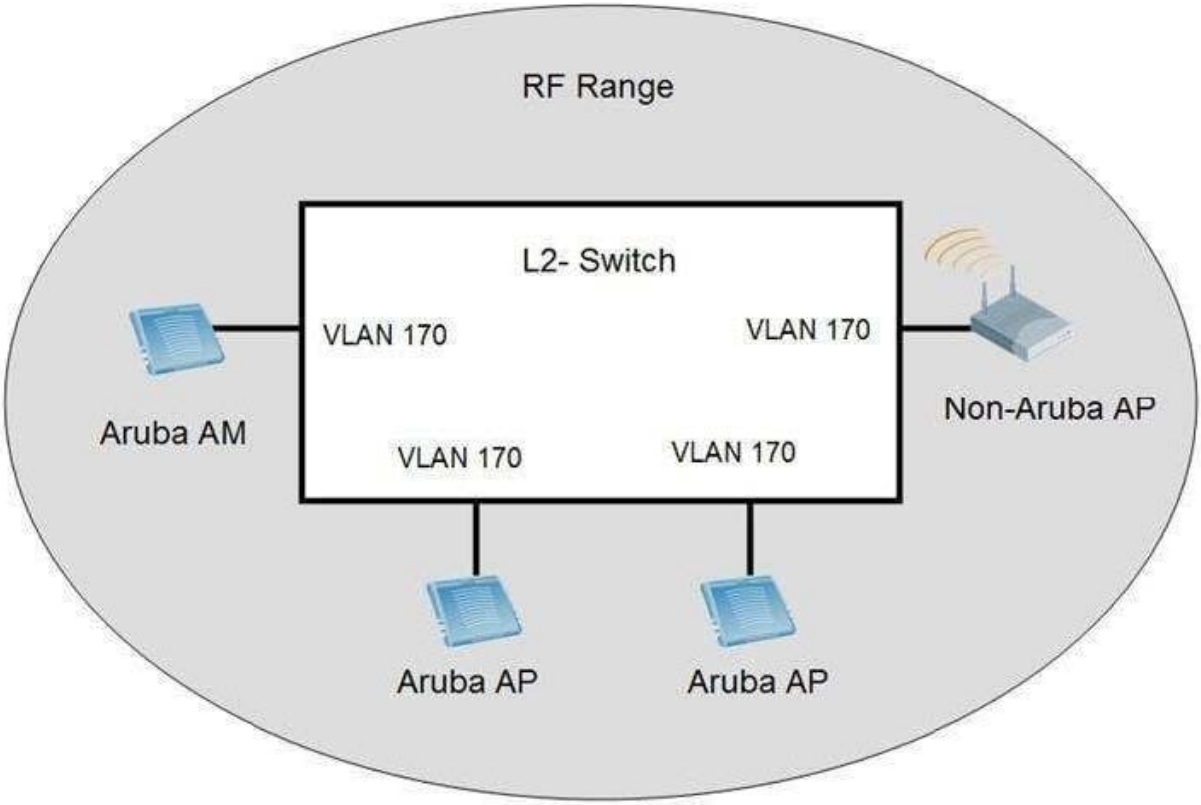

How will the Aruba system first initially classify the employee\\'s AP?

A. a valid AP

B. an AM

C. a Rouge AP

D. an interfering AP

E. a known interfering AP

Correct Answer: D

QUESTION 4

Which command can an administrator execute on a master controller to show the Aps that are up?

A. show ap database

B. show ap active

C. show ap bss-table

D. show stm connectivity

Correct Answer: A

QUESTION 5

When configuring ports in the Controller wizard, which of the following are NOT configuration options? (Choose two)

A. Inter-VLAN routing

B. Speed

C. Trusted

D. LACP

E. Trunk

Correct Answer: AD

Latest HPE6-A29 Dumps HPE6-A29 PDF Dumps HPE6-A29 Study Guide